FENCES

WHAT IS A FENCE?

A fence is defined as any structure that is a barrier and is used for the purposes of privacy, protection or confinement. Fences are divided into two types: those that interrupt vision (solid) and those that permit vision (open).

HOW HIGH CAN A FENCE BE?

For safety, light, and ventilation purposes the heights of fences is limited depending upon their location. Solid fences may be 6'0" high in the side and rear yards inside the building set back line and 3'6" high from the building set back line to the property line. The height of a fence is the distance from the existing ground (grade) to the top-most portion of the fence.

FENCE LOCATION

A fence of approved height may go almost anywhere on your property. If a fence is constructed in the front yard, it must be inside your property line and shall not enclose utility facilities (water meters, gas meters, poles, transformers, manholes, etc.). If a fence is to be built across a drainage easement or swale, the bottom should be high enough above the ground to allow storm water to pass beneath it.

OTHER CONSIDERATIONS

Since fences may only be installed on your property, it is important to know exactly where the property lines are. If you cannot locate them yourself, it would be wise to hire a surveyor to establish your lot corners. With these corners established, it will be possible for you or your fence builder to install the new fence in the right location.

The installation of a fence affects both your property and surrounding properties. It is a good idea to discuss your plans with your neighbors. The type of fence, location and costs may be influenced when neighbors work together to solve common problems.

No fence or wall shall be constructed or maintained in such a manner as would endanger the health of the general public. The fence should be a minimum of one foot from the line of sight providing a clear view of vehicles on the major or minor roadway.

The distance for the line of sight begins 15' from the traveled way and is determined by the existing speed limit.

DESIGN SPEED MPH	SIGHT DISTANCE
25	150'
35	250'
45	360'
55	500'

REQUIREMENTS

Fence location criteria is outlined on Butte County Improvement Standards Typical Sections 5 – 36 & 5 – 37 available on the web at: http://www.buttecounty.net/Public%20Works/Divisions/Land%20Development/~/media/County%20Files/Public%20Works/Public%20Internet/Divisions/LandDev/IS-06/ImprovementStd2006-III.ashx

Butte County Public Works Department (BCPW) approval will be required if any deviation from these instructions is planned. Information required, to apply for a BCPW review, is a plot plan showing the proposed location of the fence, the kind of fence, its height (maximum of 6' without a building permit) and the location of underground utilities. An inspector will visit your property to field review the desired fence installation. The information will be filed for record and future reference.

If you have any questions, contact the permit department of Butte County Public Works Department at (530) 538-7681.

CORNER LOT

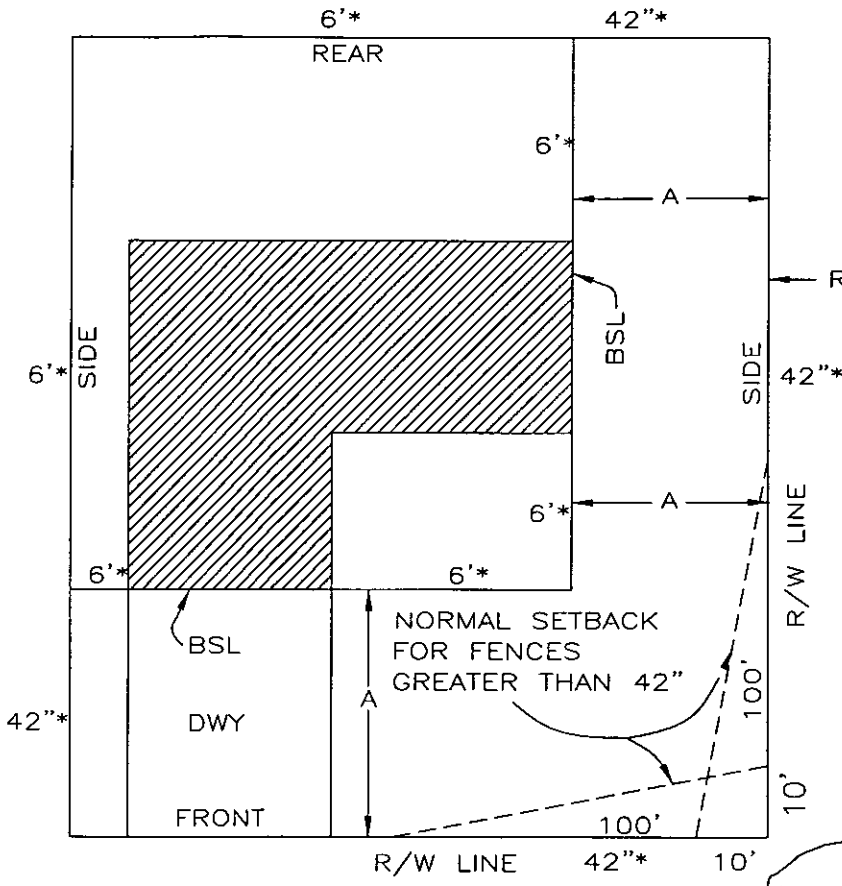

* 42" MAXIMUM FENCE HEIGHT IN BUILDING SETBACK AREA WITHOUT APPROVAL OF PUBLIC WORKS. FENCES OVER 6' IN HEIGHT MAY REQUIRE A BUILDING PERMIT PRIOR TO CONSTRUCTION.

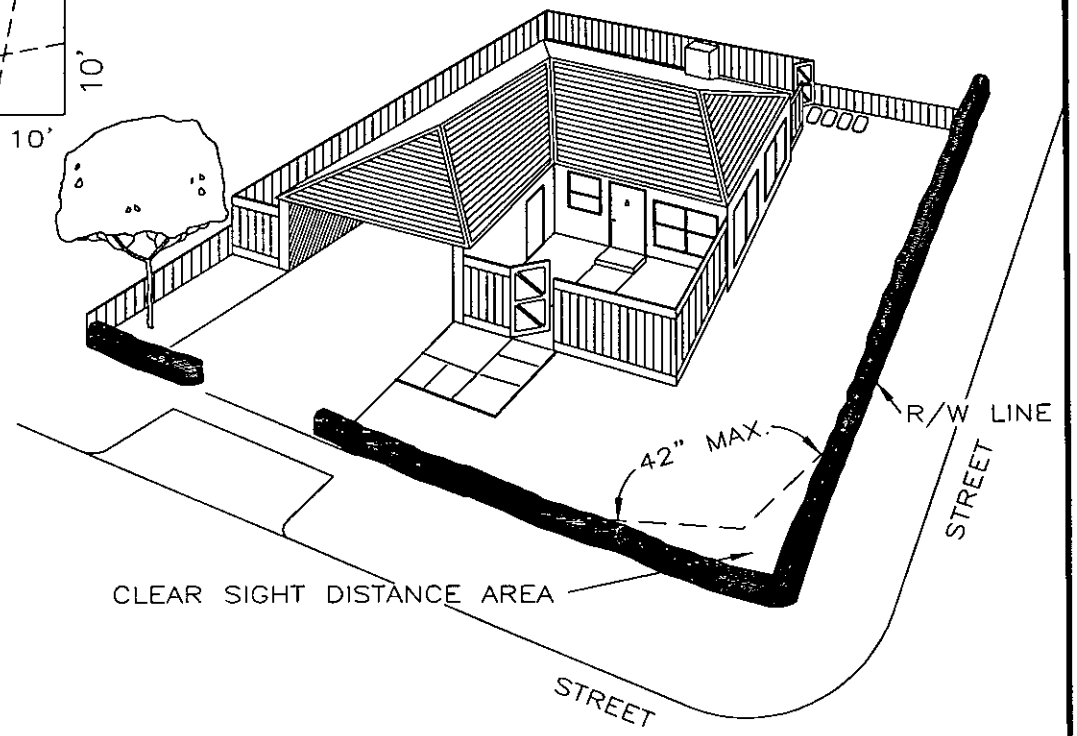

A = ARTERIALS & COLLECTORS = 25'
A = ALL OTHER STREETS = 20'
BSL = BUILDING SETBACK LINE

DEPARTMENT OF PUBLIC WORKS
FENCES, WALLS & HEDGES CORNER LOT
COUNTY STANDARD NO.
S-36
N.T.S.

RES 06-149 10/24/06

BUTTE COUNTY DEPARTMENT OF PUBLIC WORKS

INTERIOR LOT

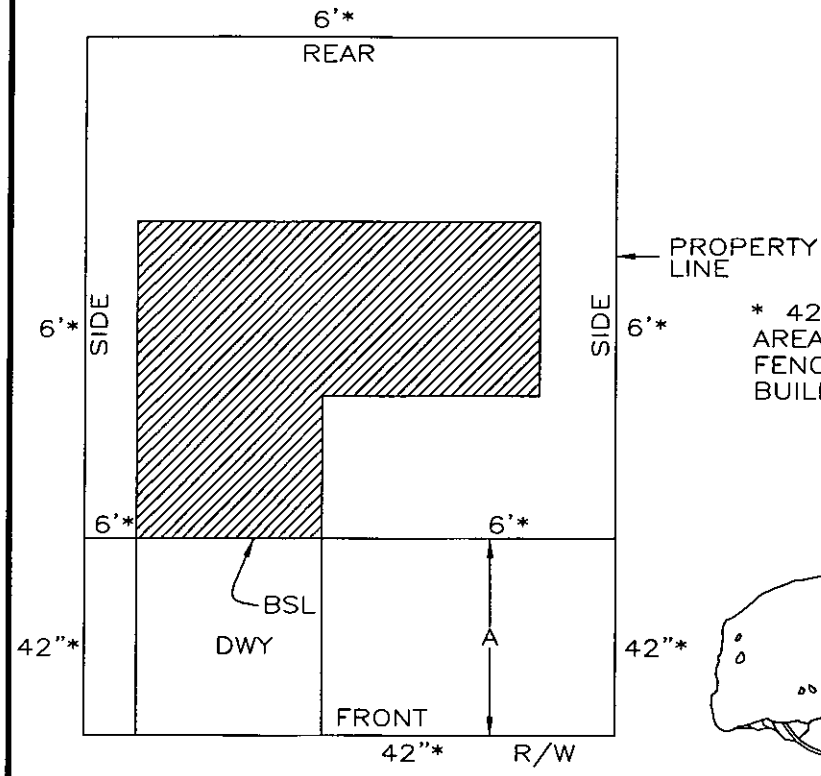

* 42" MAXIMUM FENCE HEIGHT IN BUILDING SETBACK AREA WITHOUT APPROVAL OF PUBLIC WORKS. FENCES OVER 6' IN HEIGHT MAY REQUIRE A BUILDING PERMIT PRIOR TO CONSTRUCTION.

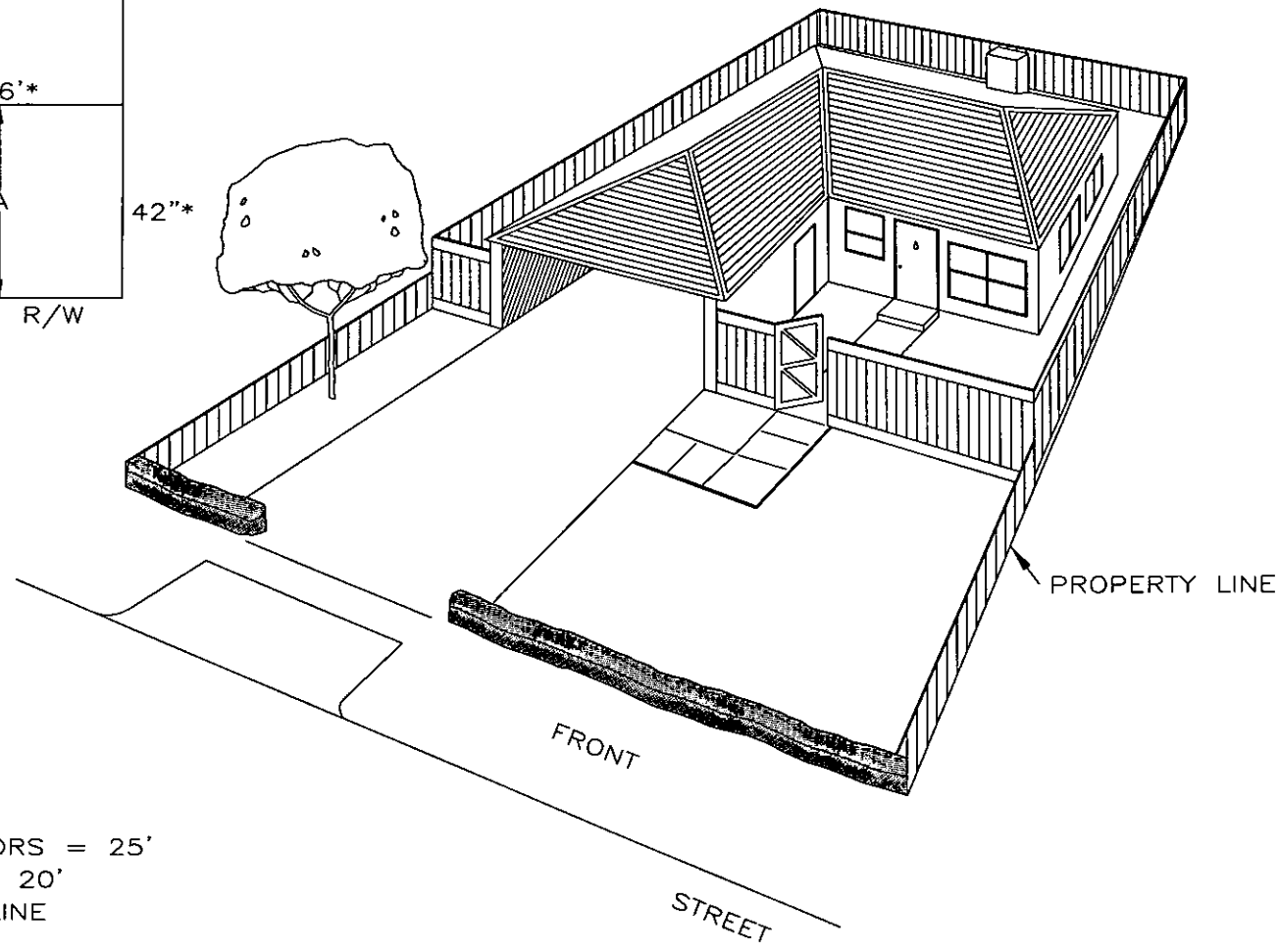

A = ARTERIALS & COLLECTORS = 25'
A = ALL OTHER STREETS = 20'
BSL = BUILDING SETBACK LINE

DEPARTMENT OF PUBLIC WORKS
FENCES, WALLS & HEDGES INTERIOR LOT
COUNTY STANDARD NO.
S-37
N.T.S.

RES 06-149 10/24/06

BUTTE COUNTY DEPARTMENT OF PUBLIC WORKS